Item: 75 cc Artistic Series Wide-Mouth Round
Family: Browse Round





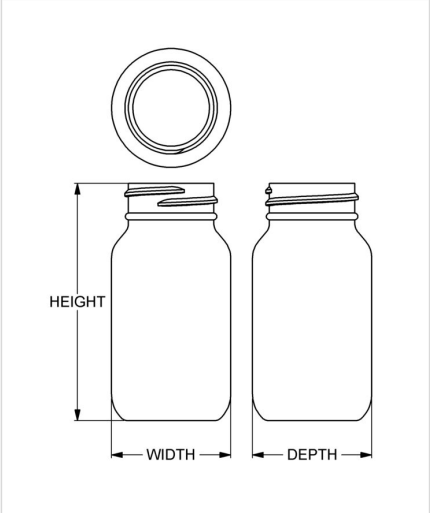

Specifications

- **Capacity** 75 ml/cc / 2.5 oz
- **Mold #** A075
- **Finish** 33-400
- **Finish Code** H1
- **Weight** 11.2 g / 0.40 oz
- **Other Weights** No
- **Height** 81.92 mm / 3.225 in
- **Width** 41.05 mm / 1.616 in
- **Depth** 41.05 mm / 1.616 in
- **Overflow** 83 ml/cc / 2.8 oz
- **Max. Bead Diameter** 31.88 mm / 1.255 in
- **Material Options** HDPE

DRUG PLASTICS
People. Process. Perfection.™

1 Bottle Drive
Boyertown, PA 19512

Phone: 1-610-367-5000
Email: info@drugplastics.com

Compatible closures & fitments



33 mm Continuous Thread Ribbed Side Smooth Top



33 mm Continuous Thread Smooth Side Smooth Top



33 mm SecuRx® Ribbed Side Text Top CRC



33 mm SecuRx® Ribbed Side Pictorial Top CRC



33 mm SecuRx® SMAT Cap Text Top CRC

DRUG PLASTICS
People. Process. Perfection.™

1 Bottle Drive
Boyertown, PA 19512

Phone: 1-610-367-5000
Email: info@drugplastics.com