Item: 625 cc Wide-Mouth Square
Family: Browse Square





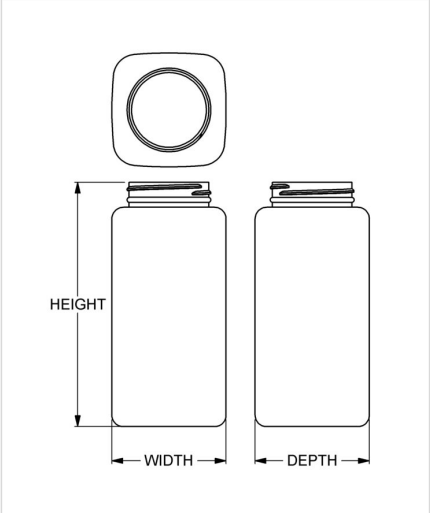

Specifications

- **Capacity** 625 ml/cc / 21.1 oz
- **Mold #** S625
- **Finish** 53-400
- **Finish Code** M1
- **Weight** 44.0 g / 1.55 oz
- **Other Weights** Yes
- **Height** 152.40 mm / 6.000 in
- **Width** 71.12 mm / 2.800 in
- **Depth** 71.12 mm / 2.800 in
- **Overflow** 625 ml/cc / 21.1 oz
- **Max. Bead Diameter** 53.04 mm / 2.088 in
- **Material Options** HDPE

DRUG PLASTICS
People. Process. Perfection.™

1 Bottle Drive
Boyertown, PA 19512

Phone: 1-610-367-5000
Email: info@drugplastics.com

Compatible closures & fitments



53 mm Continuous Thread Ribbed Side Smooth Top



53 mm Continuous Thread Smooth Side Smooth Top



53 mm SecuRx® Ribbed Side Smooth Top 2-Way Humidity Control CRC



53 mm SecuRx® Ribbed Side Text Top CRC



53 mm THUMBLE-EZY® Dispensing Top with Raised Ring

DRUG PLASTICS
People. Process. Perfection.™

1 Bottle Drive
Boyertown, PA 19512

Phone: 1-610-367-5000
Email: info@drugplastics.com