Item: 60 cc Contemporary Series Wide-Mouth Round
Family: Browse Round





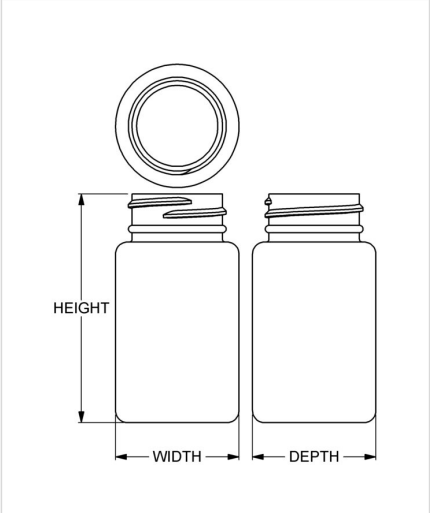

Specifications

- **Capacity** 60 ml/cc / 2.0 oz
- **Mold #** 0441
- **Finish** 33-400
- **Finish Code** H1
- **Weight** 10.0 g / 0.35 oz
- **Other Weights** No
- **Height** 74.55 mm / 2.935 in
- **Width** 40.16 mm / 1.581 in
- **Depth** 40.16 mm / 1.581 in
- **Overflow** 72 ml/cc / 2.4 oz
- **Max. Bead Diameter** 32.21 mm / 1.268 in
- **Material Options** HDPE

DRUG PLASTICS
People. Process. Perfection.™

1 Bottle Drive
Boyertown, PA 19512

Phone: 1-610-367-5000
Email: info@drugplastics.com

Compatible closures & fitments



33 mm Continuous Thread Ribbed Side Smooth Top



33 mm Continuous Thread Smooth Side Smooth Top



33 mm SecuRx® Ribbed Side Text Top CRC



33 mm SecuRx® Ribbed Side Pictorial Top CRC



33 mm SecuRx® SMAT Cap Text Top CRC

DRUG PLASTICS
People. Process. Perfection.™

1 Bottle Drive
Boyertown, PA 19512

Phone: 1-610-367-5000
Email: info@drugplastics.com