Item: 250 cc Classic Series Wide-Mouth Round
Family: Browse Round





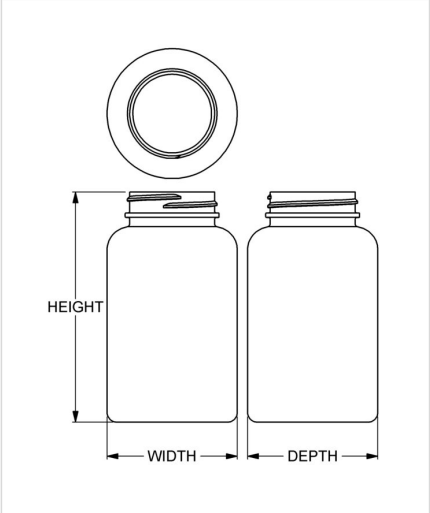

Specifications

- **Capacity** 250 ml/cc / 8.5 oz
- **Mold #** 0588
- **Finish** 45-400
- **Finish Code** K1
- **Weight** 28.0 g / 0.99 oz
- **Other Weights** Yes
- **Height** 112.52 mm / 4.430 in
- **Width** 63.50 mm / 2.500 in
- **Depth** 63.50 mm / 2.500 in
- **Overflow** 295 ml/cc / 10.0 oz
- **Max. Bead Diameter** 46.2 mm / 1.819 in
- **Material Options** PET

DRUG PLASTICS
People. Process. Perfection.™

1 Bottle Drive
Boyertown, PA 19512

Phone: 1-610-367-5000
Email: info@drugplastics.com

Compatible closures & fitments



45 mm SecuRx® GripMax™ Text Top CRC



45 mm Continuous Thread Ribbed Side Smooth Top



45 mm Continuous Thread Smooth Side Smooth Top



45 mm SecuRx® Ribbed Side Text Top CRC



45 mm THUMBLE-EZY® Dispensing Top



45 mm THUMBLE-EZY® Dispensing Top with Raised Ring

DRUG PLASTICS
People. Process. Perfection.™

1 Bottle Drive
Boyertown, PA 19512

Phone: 1-610-367-5000
Email: info@drugplastics.com