**Item:** 200 cc Wide-Mouth Square
**Family:** Browse Square





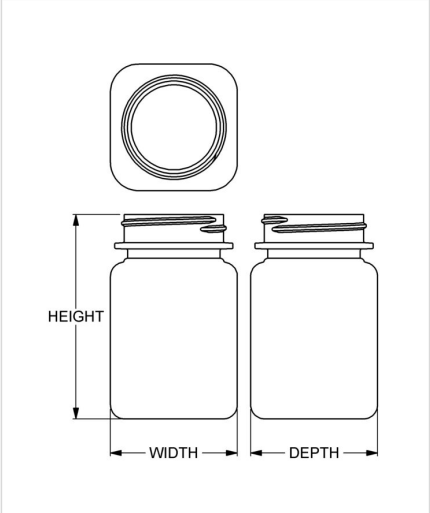


## Specifications

- **Capacity** 200 ml/cc / 6.8 oz
- **Mold #** S200
- **Finish** 48 mm
- **Finish Code** LA
- **Weight** 22.0 g / 0.78 oz
- **Other Weights** No
- **Height** 92.18 mm / 3.629 in
- **Width** 57.15 mm / 2.250 in
- **Depth** 57.15 mm / 2.250 in
- **Overflow** 223 ml/cc / 7.5 oz
- **Max. Bead Diameter** 53.24 mm / 2.096 in
- **Material Options** HDPE

DRUG PLASTICS
People. Process. Perfection.™

1 Bottle Drive
Boyertown, PA 19512

Phone: 1-610-367-5000
Email: info@drugplastics.com