Item: 16 oz Ointment Jar
Family: Browse Jar





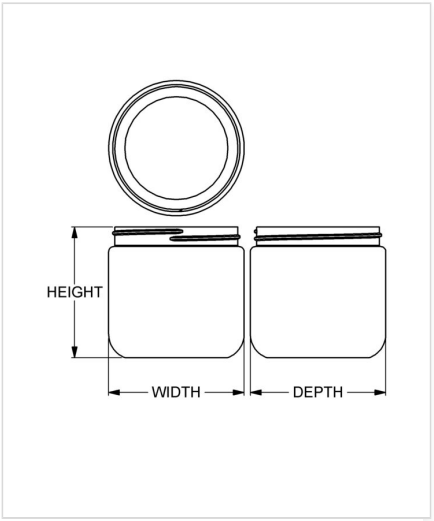

Specifications

- **Capacity** 473 ml/cc / 16.0 oz
- **Mold #** 0975
- **Finish** 89-400
- **Finish Code** P1
- **Weight** 39.0 g / 1.38 oz
- **Other Weights** No
- **Height** 91.29 mm / 3.594 in
- **Width** 94.46 mm / 3.719 in
- **Depth** 94.46 mm / 3.719 in
- **Overflow** 562 ml/cc / 19.0 oz
- **Max. Bead Diameter** N/A
- **Material Options** HDPE, PP

DRUG PLASTICS
People. Process. Perfection.™

1 Bottle Drive
Boyertown, PA 19512

Phone: 1-610-367-5000
Email: info@drugplastics.com

Compatible closures & fitments



89 mm Continuous Thread Ribbed Side Smooth Top

DRUG PLASTICS
People. Process. Perfection.™

1 Bottle Drive
Boyertown, PA 19512

Phone: 1-610-367-5000
Email: info@drugplastics.com