Item: 150 cc Snap Cap Series Wide-Mouth Round
Family: Browse Round





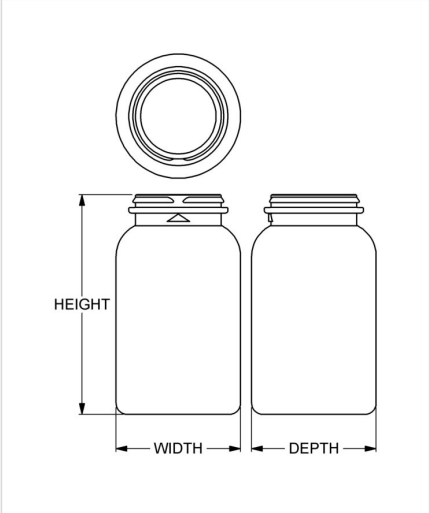

Specifications

- **Capacity** 150 ml/cc / 5.1 oz
- **Mold #** 0151
- **Finish** 38-Snp
- **Finish Code** IC
- **Weight** 18.0 g / 0.63 oz
- **Other Weights** No
- **Height** 92.08 mm / 3.625 in
- **Width** 52.07 mm / 2.050 in
- **Depth** 52.07 mm / 2.050 in
- **Overflow** 154 ml/cc / 5.2 oz
- **Max. Bead Diameter** 41.66 mm / 1.640 in
- **Material Options** HDPE

DRUG PLASTICS
People. Process. Perfection.™

1 Bottle Drive
Boyertown, PA 19512

Phone: 1-610-367-5000
Email: info@drugplastics.com

Compatible closures & fitments



38 mm Snap Cap Text Top CRC

DRUG PLASTICS
People. Process. Perfection.™

1 Bottle Drive
Boyertown, PA 19512

Phone: 1-610-367-5000
Email: info@drugplastics.com