Item: 150 cc Classic Series Wide-Mouth Round
Family: Browse Round





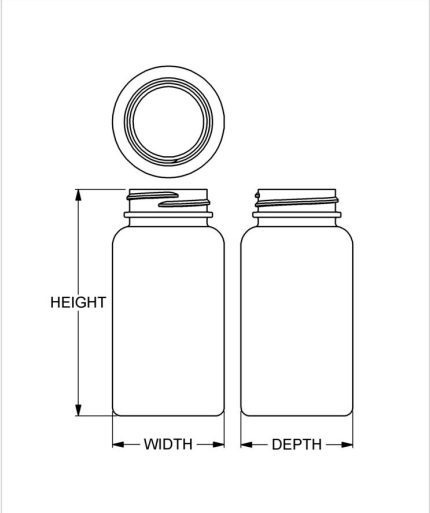

Specifications

- **Capacity** 150 ml/cc / 5.1 oz
- **Mold #** 0579
- **Finish** 38-400
- **Finish Code** I1
- **Weight** 19.0 g / 0.67 oz
- **Other Weights** Yes
- **Height** 102.11 mm / 4.020 in
- **Width** 50.37 mm / 1.983 in
- **Depth** 50.37 mm / 1.983 in
- **Overflow** 169 ml/cc / 5.7 oz
- **Max. Bead Diameter** 39.7 mm / 1.563 in
- **Material Options** PET

DRUG PLASTICS
People. Process. Perfection.™

1 Bottle Drive
Boyertown, PA 19512

Phone: 1-610-367-5000
Email: info@drugplastics.com

Compatible closures & fitments



38 mm Continuous Thread Ribbed Side Smooth Top



38 mm THUMBLE-EZY® Dispensing Top



38 mm Continuous Thread Smooth Side Smooth Top



38 mm SecuRx® Ribbed Side Pictorial Top CRC



38 mm SecuRx® Ribbed Side Text Top CRC



38 mm THUMBLE-EZY® Dispensing Top with Raised Ring



38 mm THUMBLE-EZY® III Dispensing Top



38 mm SecuRx® 15ml Dosage Cap™ with Ribbed Side Text Top

DRUG PLASTICS
People. Process. Perfection.™

1 Bottle Drive
Boyertown, PA 19512

Phone: 1-610-367-5000
Email: info@drugplastics.com