Item: 120 cc Artistic Series Wide-Mouth Round
Family: Browse Round

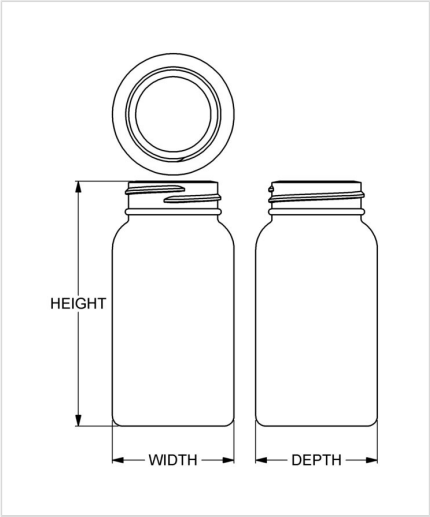

Specifications

- **Capacity** 120 ml/cc / 4.1 oz
- **Mold #** 0473
- **Finish** 38-400
- **Finish Code** I1
- **Weight** 19.0 g / 0.67 oz
- **Other Weights** No
- **Height** 95.76 mm / 3.770 in
- **Width** 47.50 mm / 1.870 in
- **Depth** 47.50 mm / 1.870 in
- **Overflow** 133 ml/cc / 4.5 oz
- **Max. Bead Diameter** 37.87 mm / 1.491 in
- **Material Options** HDPE

DRUG PLASTICS
People. Process. Perfection.™

1 Bottle Drive
Boyertown, PA 19512

Phone: 1-610-367-5000
Email: info@drugplastics.com

Compatible closures & fitments

38 mm Continuous Thread Ribbed Side Smooth Top

38 mm THUMBLE-EZY® Dispensing Top

38 mm Continuous Thread Smooth Side Smooth Top

38 mm SecuRx® Ribbed Side Pictorial Top CRC

38 mm SecuRx® Ribbed Side Text Top CRC

38 mm THUMBLE-EZY® Dispensing Top with Raised Ring

38 mm THUMBLE-EZY® III Dispensing Top

38 mm SecuRx® 15ml Dosage Cap™ with Ribbed Side Text Top

DRUG PLASTICS
People. Process. Perfection.™

1 Bottle Drive
Boyertown, PA 19512

Phone: 1-610-367-5000
Email: info@drugplastics.com