**Item:** 100 cc Artistic Series Wide-Mouth Round
**Family:** Browse Round





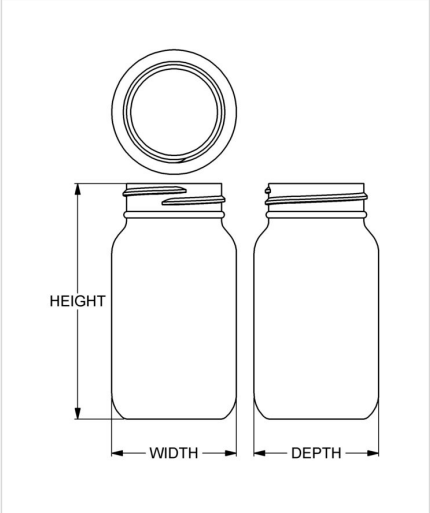


## Specifications

- **Capacity** 100 ml/cc / 3.4 oz
- **Mold #** A100
- **Finish** 38-400
- **Finish Code** I1
- **Weight** 13.3 g / 0.47 oz
- **Other Weights** No
- **Height** 86.36 mm / 3.400 in
- **Width** 45.64 mm / 1.797 in
- **Depth** 45.64 mm / 1.797 in
- **Overflow** 112 ml/cc / 3.8 oz
- **Max. Bead Diameter** 37.24 mm / 1.466 in
- **Material Options** HDPE

DRUG PLASTICS
People. Process. Perfection.™

1 Bottle Drive
Boyertown, PA 19512

Phone: 1-610-367-5000
Email: info@drugplastics.com

# Compatible closures & fitments



38 mm Continuous Thread Ribbed Side Smooth Top



38 mm THUMBLE-EZY® Dispensing Top



38 mm Continuous Thread Smooth Side Smooth Top



38 mm SecuRx® Ribbed Side Pictorial Top CRC




38 mm SecuRx® Ribbed Side Text Top CRC



38 mm THUMBLE-EZY® Dispensing Top with Raised Ring



38 mm THUMBLE-EZY® III Dispensing Top



38 mm SecuRx® 15ml Dosage Cap™ with Ribbed Side Text Top

DRUG PLASTICS
People. Process. Perfection.™

1 Bottle Drive
Boyertown, PA 19512

Phone: 1-610-367-5000
Email: info@drugplastics.com