Item: FreeStyle™ 30 cc Contemporary Series Wide-Mouth Med Round
Family: FreeStyle™ Round

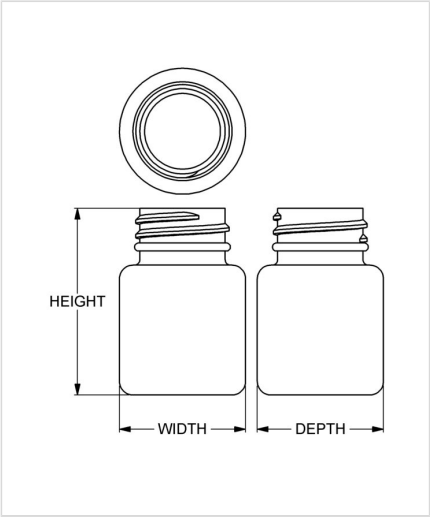

Specifications

- **Capacity** 30 ml/cc / 1.0 oz
- **Mold #** 0030
- **Finish** 28-400
- **Finish Code** GP
- **Weight** 6.5 g / 0.23 oz
- **Other Weights** No
- **Height** 54.76 mm / 2.156 in
- **Width** 36.91 mm / 1.453 in
- **Depth** 36.91 mm / 1.453 in
- **Overflow** 41 ml/cc / 1.4 oz
- **Max. Bead Diameter** 28.45 mm / 1.120 in
- **Material Options** Post-Consumer Recycled HDPE, HDPE

DRUG PLASTICS
People. Process. Perfection.™

1 Bottle Drive
Boyertown, PA 19512

Phone: 1-610-367-5000
Email: info@drugplastics.com